REV.	DATE	DESCRIPTION
NC	05/10/04	INITIAL RELEASE

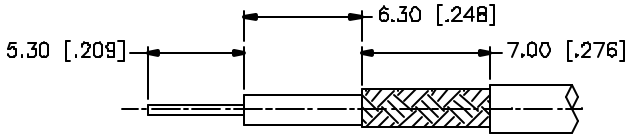

RECOMMENDED CABLE
STRIPPING DIMENSIONS

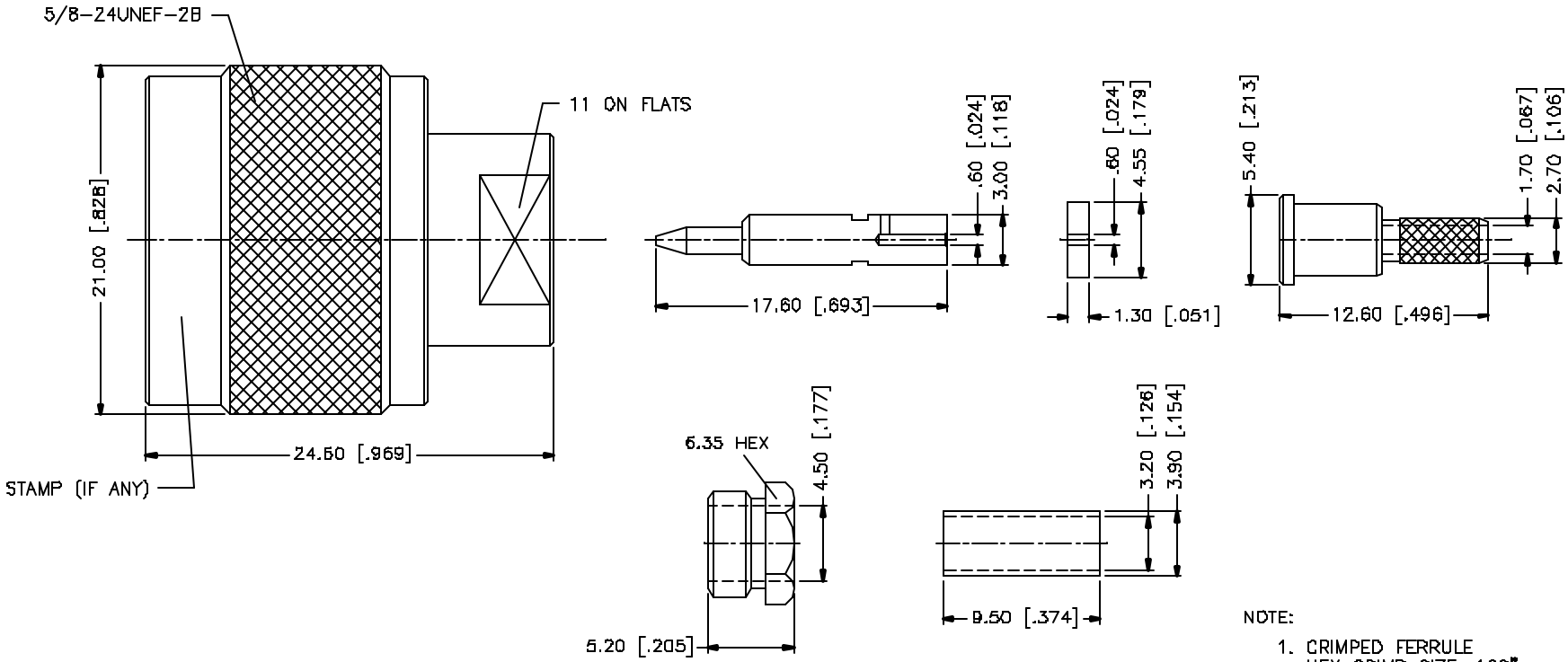

NOTE:

1. CRIMPED FERRULE
   HEX CRIMP SIZE .128"
2. CRIMPED CONTACT PIN
   HEX CRIMP SIZE .100"

	DESCRIPTION	MATERIAL	FINISH	QTY
8				
7				
6	FERRULE	COPPER	NEXCOTE	1
5	HEX NUT	BRASS	NEXCOTE	1
4	BARREL	BRASS	NEXCOTE	1
3	CONTACT PIN	BRASS	GOLD	1
2	INSULATOR	TEFLON	NATURAL	2
1	SHELL/BODY	BRASS	NEXCOTE	1

UNLESS OTHERWISE SPECIFIED DIMENSIONS ARE IN MILLIMETERS. DIMENSIONS IN [ ] ARE IN INCHES AND FOR CUSTOMER REFERENCE ONLY.

UNLESS OTHERWISE SPECIFIED TOLERANCES FOR MILLIMETERS ARE:
0.5 – 8mm ± 0.20mm
8 – 30mm ± 0.40mm
30 – 120mm ± 0.50mm

UNLESS OTHERWISE SPECIFIED TOLERANCES FOR INCHES ARE:
.020 – .315 = ± 0.007"
.315 – 1.180 = ± 0.015"
1.180 – 4.724 = ± 0.020"

DO NOT SCALE DRAWING

APPROVALS		DATE
DRAWN	G.R.S.	05/10/04
CHECKED		
ISSUED		
SHEET	1 OF 1	
CAD FILE	C:/172/172128.DWG	

Amphenol Connex

PART DESCRIPTION
N CRIMP PLUG
(FOR RG-174/U, 188A/U, 316/U)

PART NO. 172128

DWG. NO.	REV.	SIZE	SCALE
172128.DWG	NC	A	NA