THIS DRAWING IS UNPUBLISHED. RELEASED FOR PUBLICATION -,- .
© COPYRIGHT - By - ALL RIGHTS RESERVED.

LOC	DIST
GP	00

REVISIONS

P	LTR	DESCRIPTION	DATE	DWN	APVD
	P	REVISED PER ECO-11-004835	11MAR11	RK	HMR

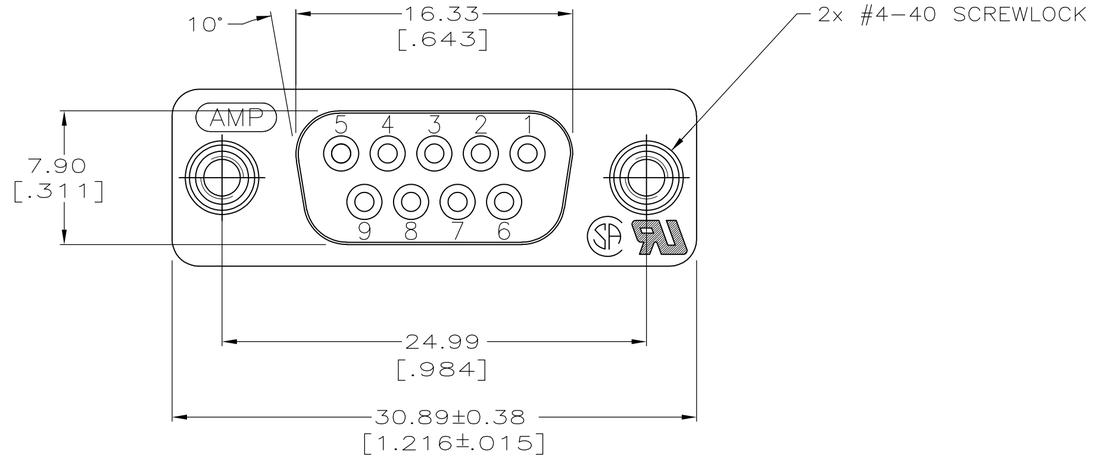

1. HOUSING: BLACK POLYESTER, UL 94V-0 RATED.
   CONTACTS: PHOSPHOR BRONZE.
   SCREWLOCKS: BRASS.
2. CONTACTS: SEE TABLE.
   SCREWLOCKS: 1.27 µm[.000050] MIN NICKEL OVER COPPER FLASH.
3. GOLD FLASH FOR A LENGTH OF 2.54[.100] MIN FROM MATING END, 2.54µm[.000100] MIN TIN ON OPPOSITE END, ALL OVER 1.27µm[.000050] MIN NICKEL.
4. 0.76µm[.000030] MIN GOLD FOR A LENGTH OF 2.54[.100] MIN FROM MATING END, 2.54µm[.000100] MIN TIN ON OPPOSITE END, ALL OVER 1.27µm[.000050] MIN NICKEL.

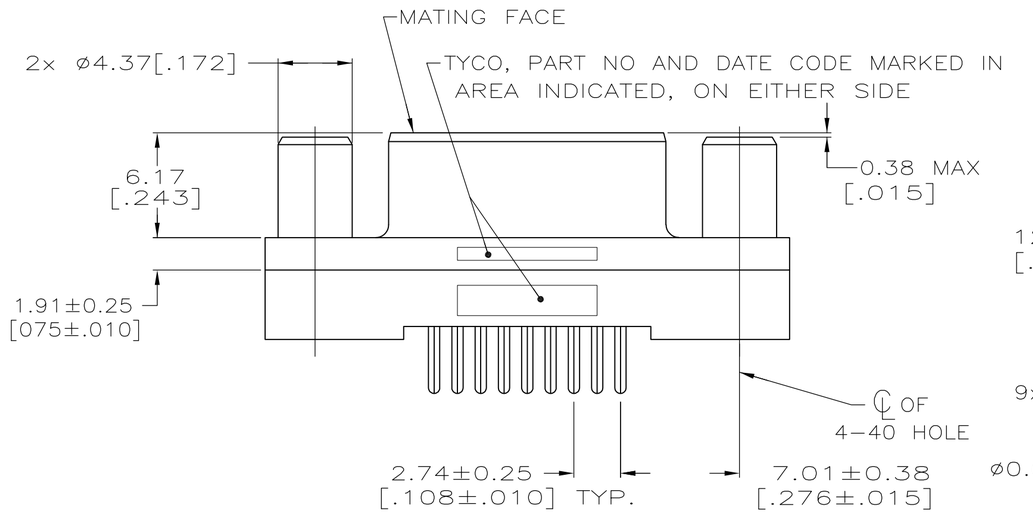

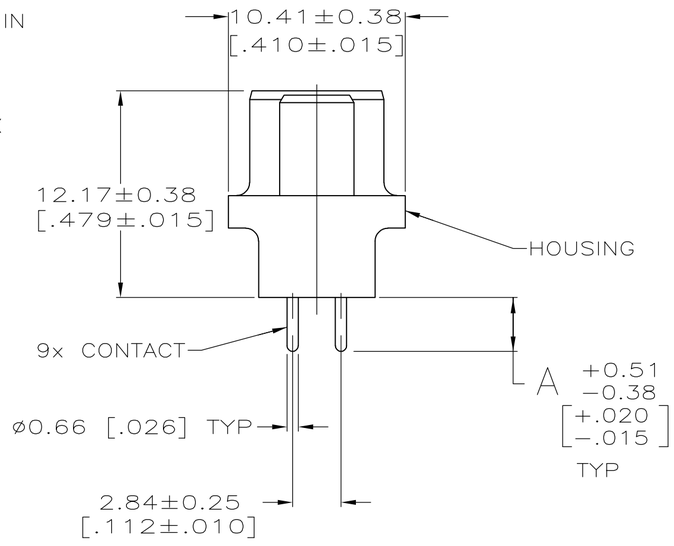

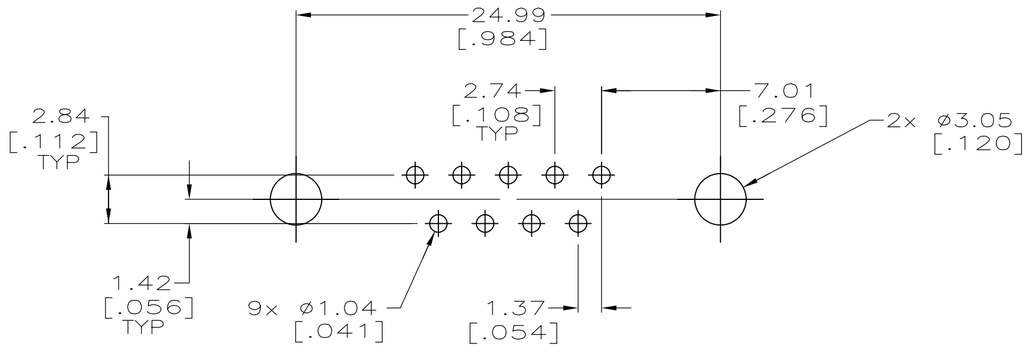

RECOMMENDED PC BOARD MOUNTING DIMENSIONS

A	CONTACT FINISH	PART NO
4.32 [.170]	4	5745076-6
3.18 [.125]	4	5745076-4
3.18 [.125]	3	5745076-3

COPYRIGHT 2005
TE CONNECTIVITY CORP
ALL RIGHTS RESERVED

THIS DRAWING IS A CONTROLLED DOCUMENT.

DIMENSIONS: mm[INCHES]

TOLERANCES UNLESS OTHERWISE SPECIFIED:
0 PLC ± -
1 PLC ± -
2 PLC ± 0.13 [.005]
3 PLC ± -
4 PLC ± -
ANGLES ± 2°

MATERIAL 1
FINISH 2

DWN G.PETERS 13SEP05
CHK S.BOLASH 13SEP05
APVD M.WALMSLEY 13SEP05
PRODUCT SPEC 108-40025
APPLICATION SPEC —
WEIGHT —

TE Connectivity

NAME: RECEPTACLE ASSEMBLY, SIZE 1, 9 POSN, VERTICAL, AMPLIMITE HD-20

SIZE	CAGE CODE	DRAWING NO	RESTRICTED TO
A2	00779	C-5745076	—

CUSTOMER DRAWING | SCALE 4:1 | SHEET 1 OF 1 | REV P

5745076

1471-9 (3/11)