used for: D-SUB

POS.	A -0.76	B -0.25	C	PART-NO.
9	31.19	16.46	$25.00^{+0.12}_{-0.13}$	**4STD09SCM99A10X**
15	39.52	24.79	$33.30^{+0.15}_{-0.1}$	**4STD15SCM99A10X**
25	53.42	38.50	47.04 ±0.13	**4STD25SCM99A10X**
37	69.70	54.96	63.50 ±0.13	**4STD37SCM99A10X**

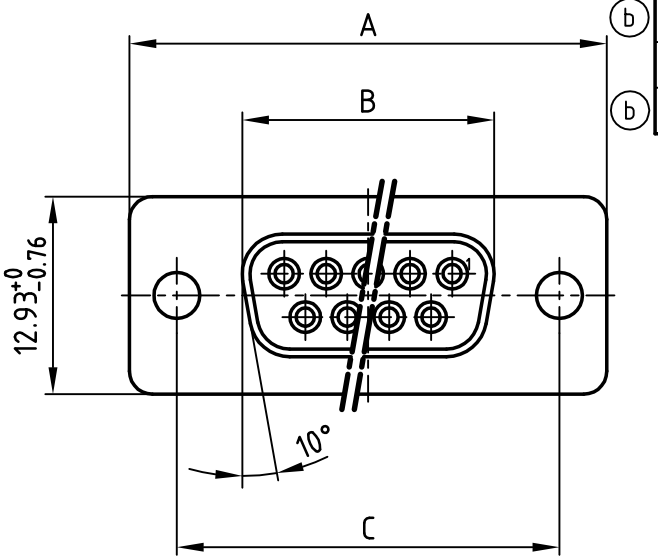

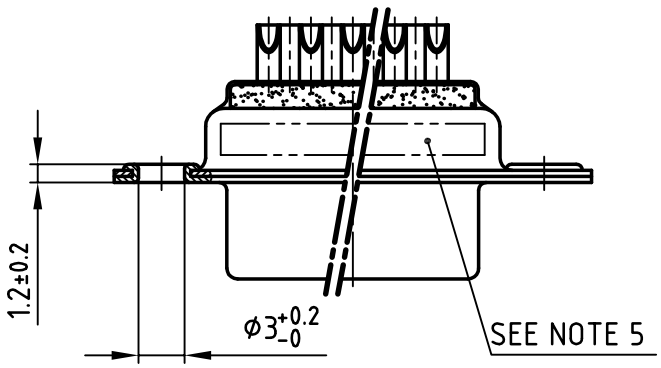

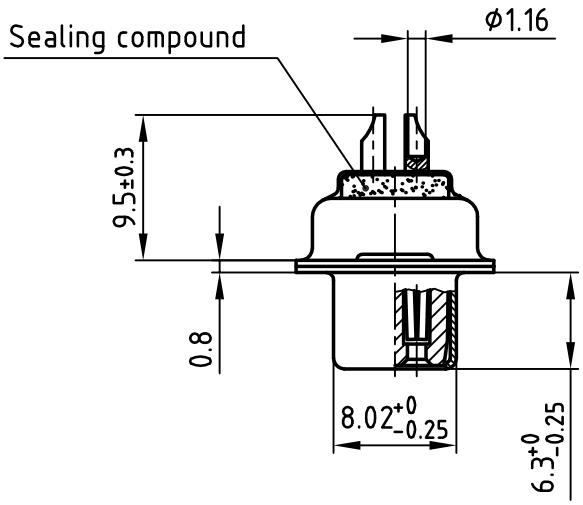

Directive 2002/95/EC „RoHS" Compliant

APPROVAL # FREIGABE # DEBLOCAGE # AUTORIZACION # APPROVAL

CUSTOMER APPROVAL DATE:

NAME: TITLE:

COMPANY NAME:

APPROVAL # FREIGABE # DEBLOCAGE # AUTORIZACION # APPROVAL

(b) NOTES:

1. METALSHELLS: COPPER ALLOY; min. 320µin TIN
2. INSULATORS: PBT GF UL 94 V-0, BLACK
3. CONTACTS: COPPER ALLOY
   SOLDER CUP ACCEPTS CABLE AWG 20
4. PLATING: min. 30µin HARD GOLD OVER min. 50µin NICKEL
5. CONNECTOR IS PART MARKED: PART-NO. CONEC ABC

THIS DRAWING MAY NOT BE COPIED OR REPRODUCED IN ANY WAY, AND MAY NOT BE PASSED ON TO A THIRD PARTY WITHOUT WRITTEN PERMISSION. OWNERSHIP AND COPYRIGHT OF CONEC GmbH

DO NOT ALTER CAD DRAWING BY HAND

rev.	description	date	name
3 x b	Ä 3045	25.06.2008	Petker
a	Origin		

tolerance

dim. in mm

	date	name
1999		
drawn	26.04.	Barcinski
appd.	26.04.	Mickenbecker
norm	DIN 41652	
d-old		

CONEC®

scale: 2:1

material: SEE NOTES

title: D-SUB FEMALE
SOLDER CUP 9-37pos.
for watertight hood

dwg no: 18K1IB2A

AutoCAD 2000

DIN-A 4

sh: 1/1

part no: SEE TABLE