THIS DRAWING IS UNPUBLISHED. RELEASED FOR PUBLICATION –,– .
© COPYRIGHT – By – ALL RIGHTS RESERVED.

LOC	DIST
GP	00

REVISIONS

P	LTR	DESCRIPTION	DATE	DWN	APVD
	U	REDRAWN PER ECO-11-022158	08NOV2011	CJV	CWR

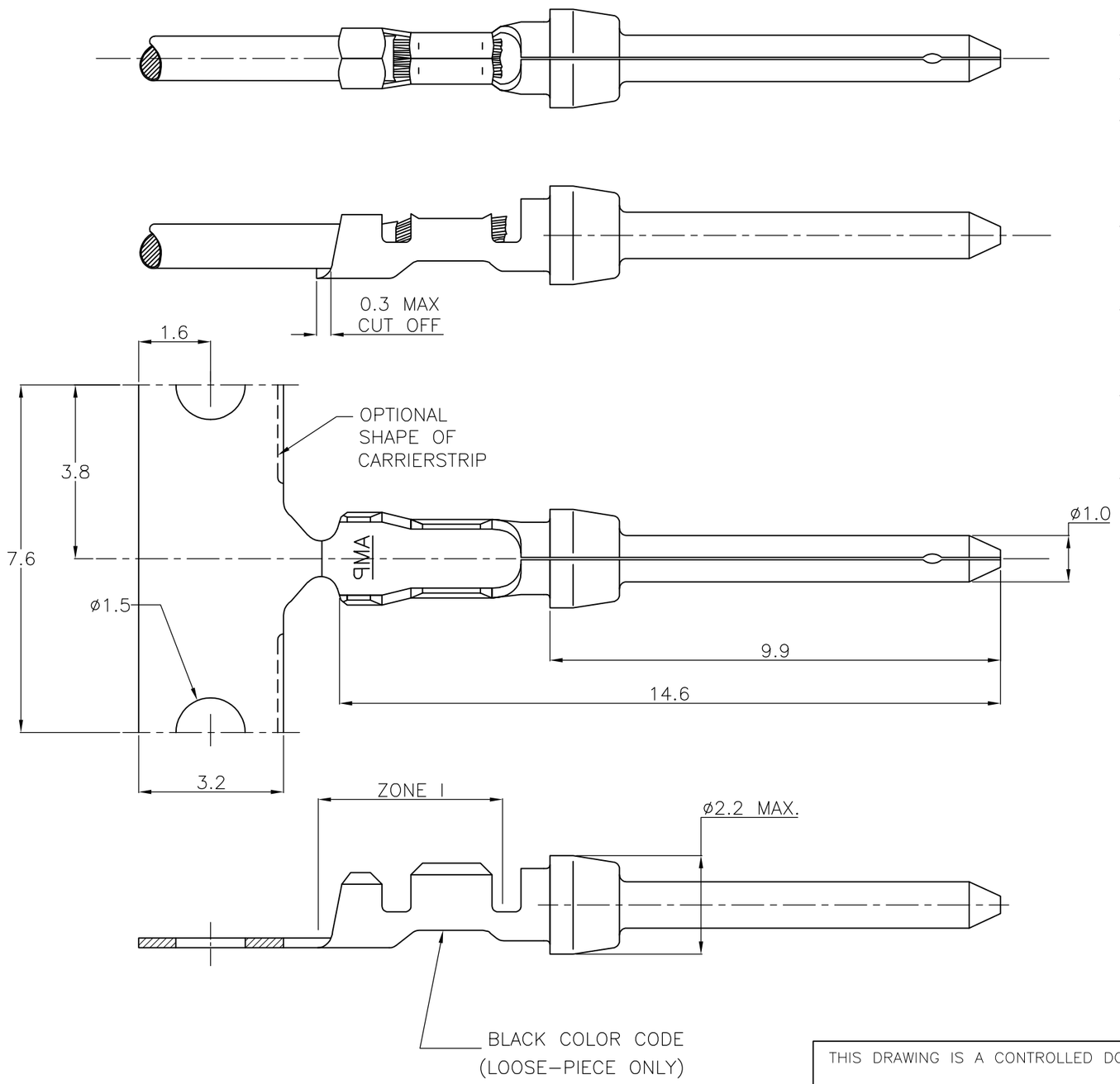

1. FOR MINI-APPLICATOR CRIMPING.
2. FOR STANDARD APPLICATOR CRIMPING.
3. FOR REEL-FEED HANDTOOL CRIMPING, 500 CONTACTS ON A SMALL REEL.
4. MATERIAL: BRASS.
5. UNDERCOATING: 1.3µm NICKEL.
   SELECTIVE: 0.8µm GOLD.
   REMAINDER: GOLD FLASH.
6. UNDERCOATING: 1.3µm NICKEL.
   SELECTIVE: 0.8µm GOLD.
   ZONE 1: BRIGHT TIN.
7. UNDERCOATING: 0.8µm NICKEL.
   SELECTIVE: 0.4µm GOLD.
   REMAINDER: GOLD FLASH.
8. UNDERCOATING: 0.8µm NICKEL.
   SELECTIVE: 0.4µm GOLD.
   ZONE 1: BRIGHT TIN.
9. UNDERCOATING: 1.3µm NICKEL.
   SELECTIVE: 1.3µm GOLD.
   REMAINDER: GOLD FLASH.
10. UNDERCOATING: 0.8µm NICKEL.
    SELECTIVE: GOLD FLASH (0.1µm) OVER 6.0 LENGTH FROM TIP.
    ZONE 1: BRIGHT TIN.
11. UNDERCOATING: 0.8µm NICKEL.
    SELECTIVE: 0.2µm GOLD.
    REMAINDER: GOLD FLASH.
12. UNDERCOATING: 0.8µm NICKEL.
    SELECTIVE: 0.2µm GOLD.
    ZONE 1: BRIGHT TIN.
13. OBSOLETE PARTS: OBSOLETE CIS STREAMLINING PER D. RENAUD/ D. SINISI

13	12	1-166997-3	–	–	~~1-166995-3~~
13	11	1-166997-2	–	–	~~1-166995-2~~
13	10	166997-8	–	–	~~166995-8~~
13	9	166997-7	–	–	~~166995-7~~
	8	166997-6	–	–	166995-6
13	7	166997-5	–	–	~~166995-5~~
	6	166997-3	–	–	166995-3
	5	166997-2	–	–	166995-2
	FINISH	LOOSE PIECE	PART NUMBER 3	PART NUMBER 2	PART NUMBER 1

WIRE RANGE: 28-32 AWG(0.03-0.09mm²)

INSUL. RANGE: 0.5 – 1.02 mm DIA.

THIS DRAWING IS A CONTROLLED DOCUMENT.

DIMENSIONS: mm

TOLERANCES UNLESS OTHERWISE SPECIFIED:

0 PLC	± –
1 PLC	± 0.127
2 PLC	± –
3 PLC	± –
4 PLC	± –
ANGLES	± –

MATERIAL: –

FINISH: SEE TABLE

DWN	C. VALENTINE	08NOV2011
CHK	C. ROHDE	08NOV2011
APVD	C. ROHDE	08NOV2011
PRODUCT SPEC	108-40005	
APPLICATION SPEC	114-10000	
WEIGHT	–	

TE Connectivity

NAME: PIN CONTACT, SIZE 20 DF. –

SIZE	CAGE CODE	DRAWING NO	RESTRICTED TO
A3	00779	C-166995	–

CUSTOMER DRAWING | SCALE NTS | SHEET 1 OF 1 | REV U