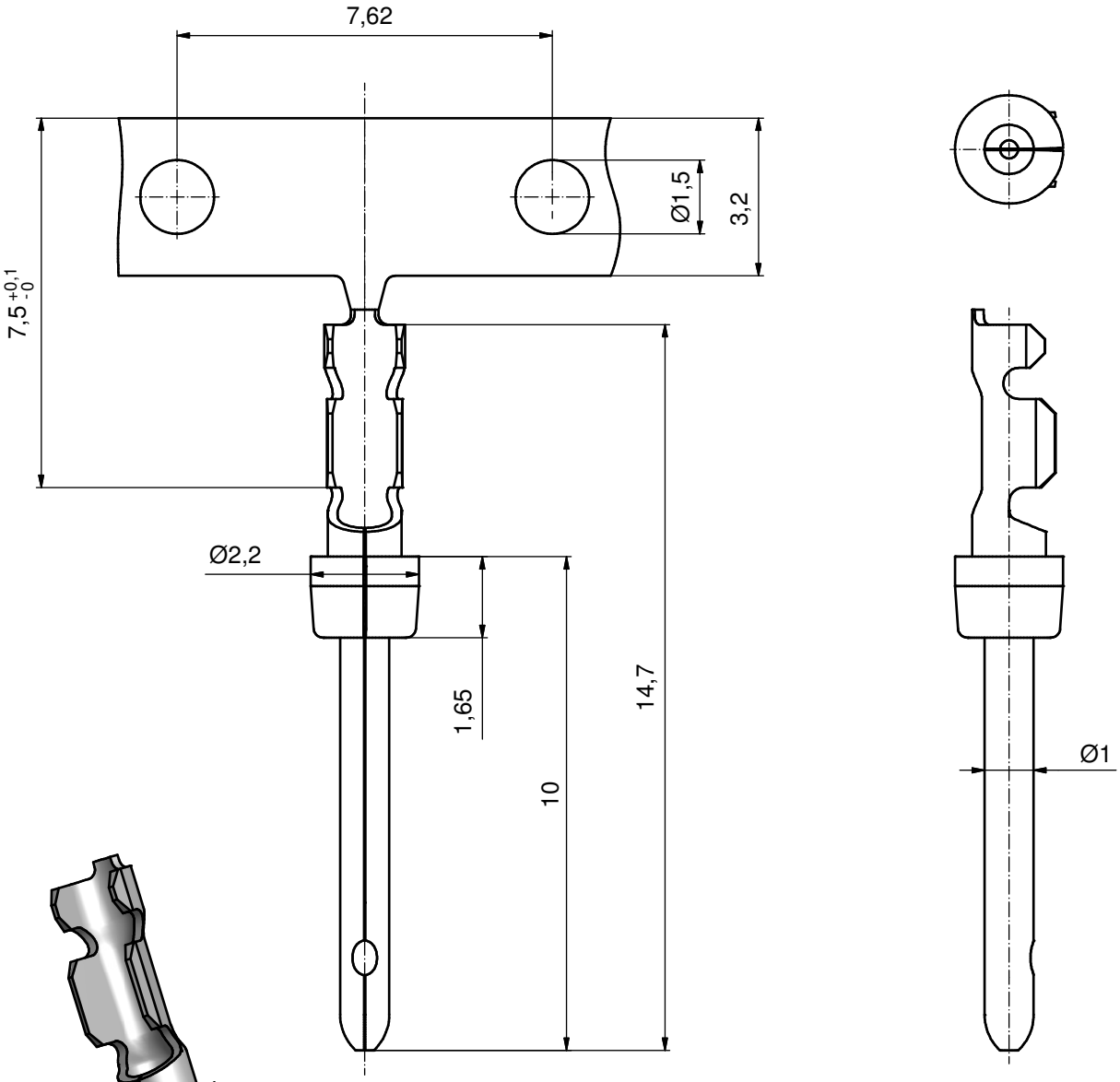

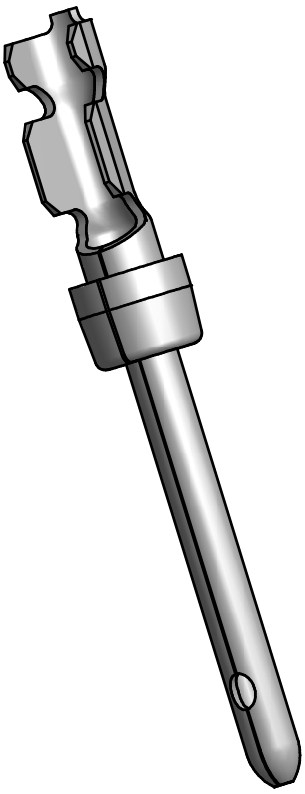

STRIPPING DIMENSIONS

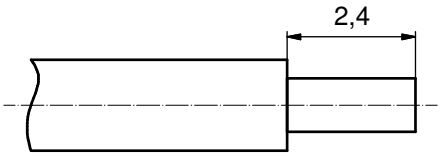

NOTES:

Material: phosphor bronce
Finish: Gold Flash over Nickel in the contact area
Temperature range: -55℃ to +125℃
Rated current: 5.0A
Contact resistance: <= 10mOhm
Length of reel-small reel wheeled right: 500 Contacts
Crimping: use crimp tool 360X10079X

Directive 2002/95/EC RoHS compliant

THIS DRAWING MAY NOT BE COPIED OR REPRODUCED IN ANY WAY, AND MAY NOT BE PASSED ON TO A THIRD PARTY WITHOUT WRITTEN PERMISSION. OWNERSHIP AND COPYRIGHT OF CONEC GmbH

DO NOT ALTER CAD DRAWING BY HAND

rev.	description	date	name
a	Origin		

tolerance

dim. in mm

	date	name
drawn	18.01.11	Henneboel
appd.	18.01.11	Koch
norm		
d-old		

CONEC®

scale: 10:1

material:

title:

SOCKET CONTACT
CRIMP AWG 24-28
(small spool wheeled right)

dwg no: 16K1A2761

DIN-A3

sh: 1

part no: 161A13429X