Identification	Cable entry	Part number Low construction	Part number High construction	Drawing Dimensions in mm
Han® M, Bulkhead mounted housings 		09 37 010 0301		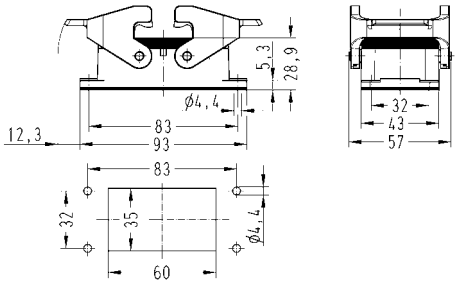 Panel cut out
Han® M, Surface mounted housings, side entry 	2xM20 2xM25 2xM32	19 37 010 1270	19 37 010 0296 19 37 010 0272	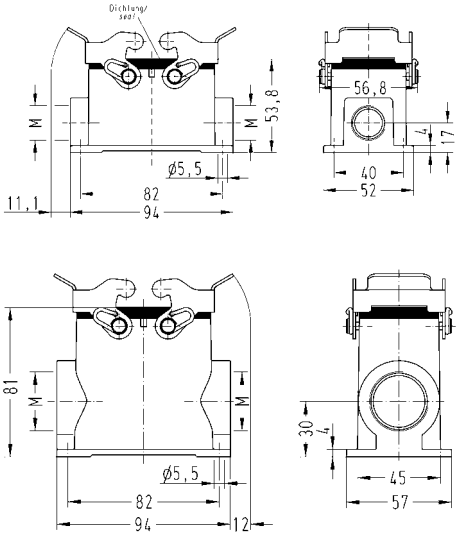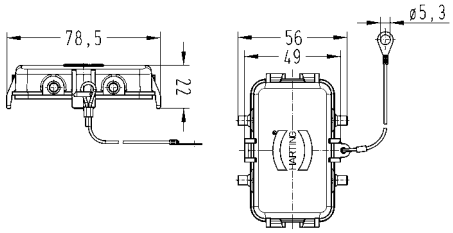
Han® M, Protection cover, metal, with securing flex 		09 37 010 5405	09 37 010 5405