THIS DRAWING IS UNPUBLISHED. RELEASED FOR PUBLICATION 1997
© COPYRIGHT 1997 BY TYCO ELECTRONICS CORPORATION. ALL RIGHTS RESERVED.

LOC	DIST	P	LTR	DESCRIPTION	DATE	DWN	APVD
A1			B3	ECR-10-017493	28.11.11	SR	AR

REVISIONS

PN 3-6

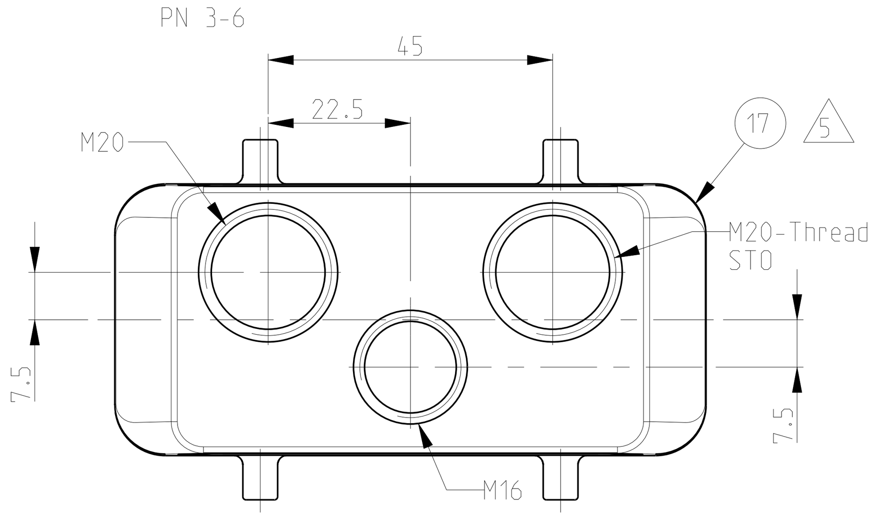

PN 0-2.0-5.3-3.3-4.3-5.3-1

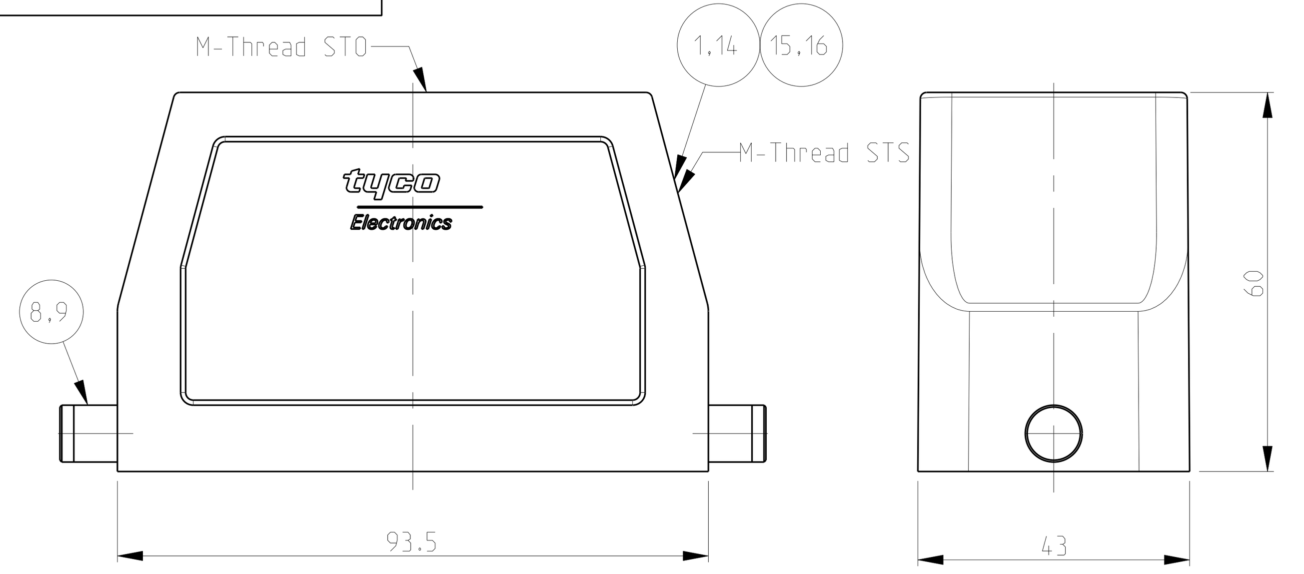

PN 0-1.0-4.2-5.2-6 & 2-8

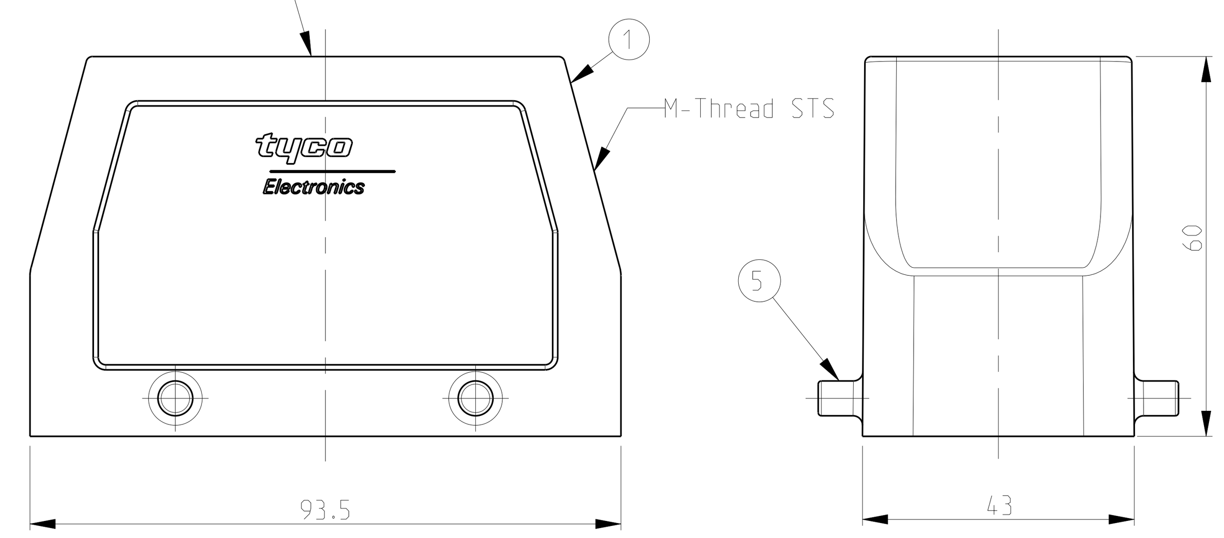

NOTES

1 Surface:- -Powder varnish grey
-Aluminium oxide+-Varnish black
-Chromital TCP passivation+varnish black

2 Varnish on the inside not necessary

3 Packaging
Packaging quantity 5 piece in a box

4 Special Packaging

PN 0-3.0-6.2-7 & 2-9

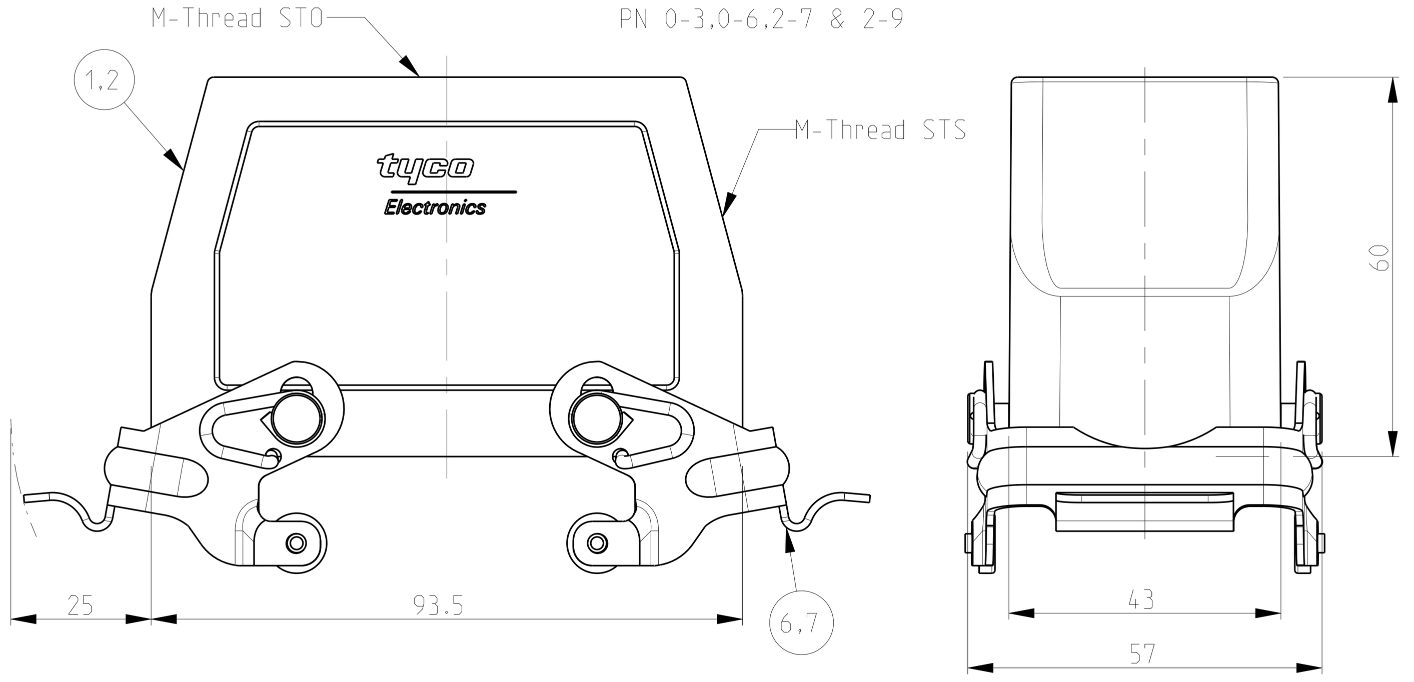

PN 1-6

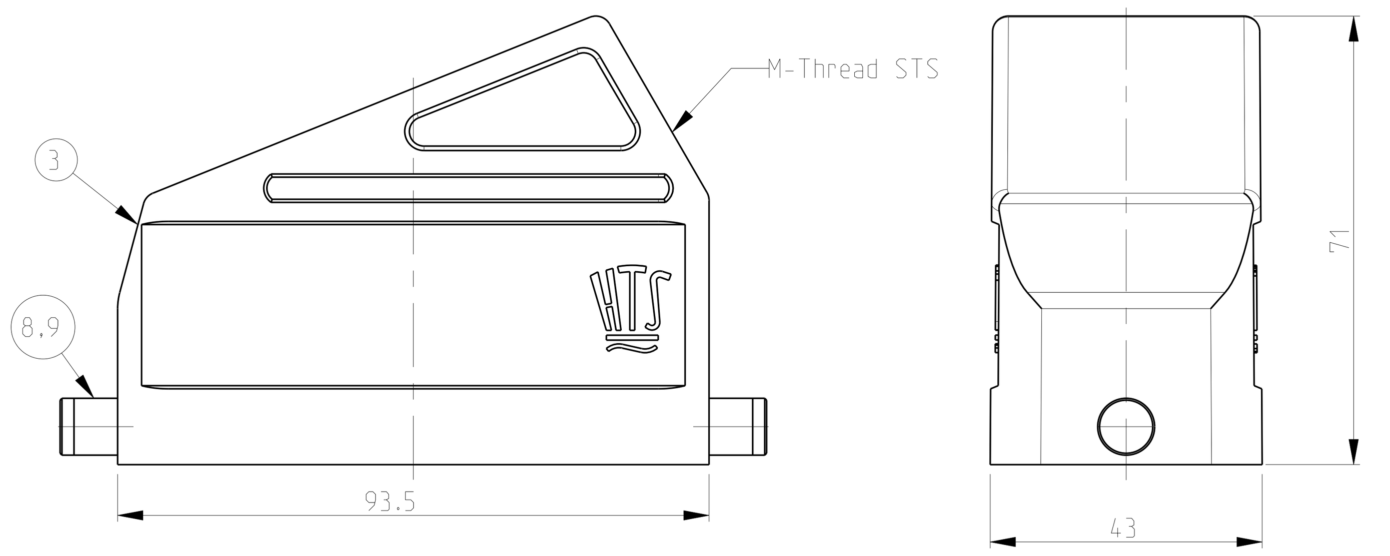

PN 1-0.3-0.0-7.0-9 & 1-2

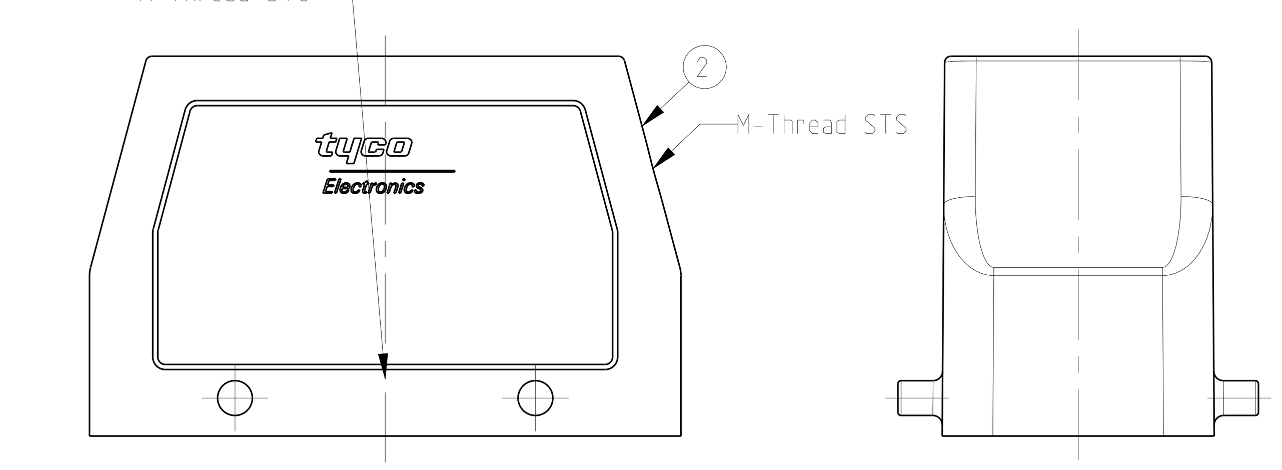

PN 2-4 & 1-4

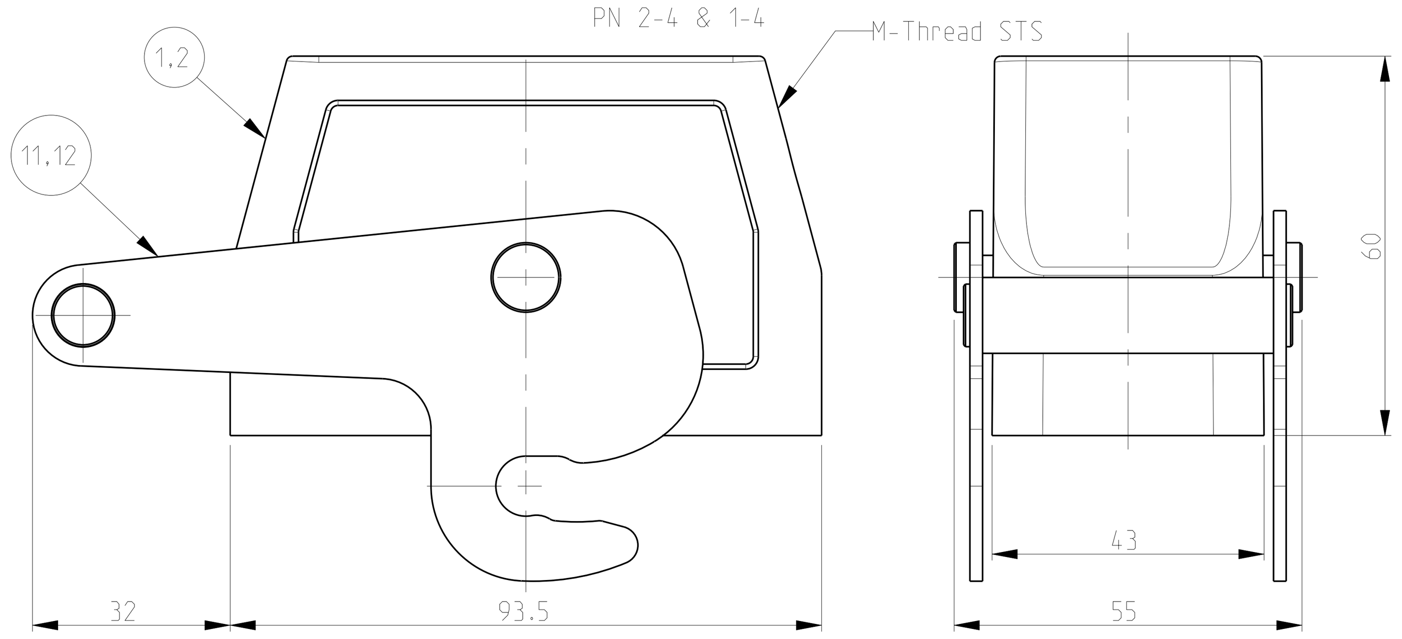

PN 1-8 & 1-5

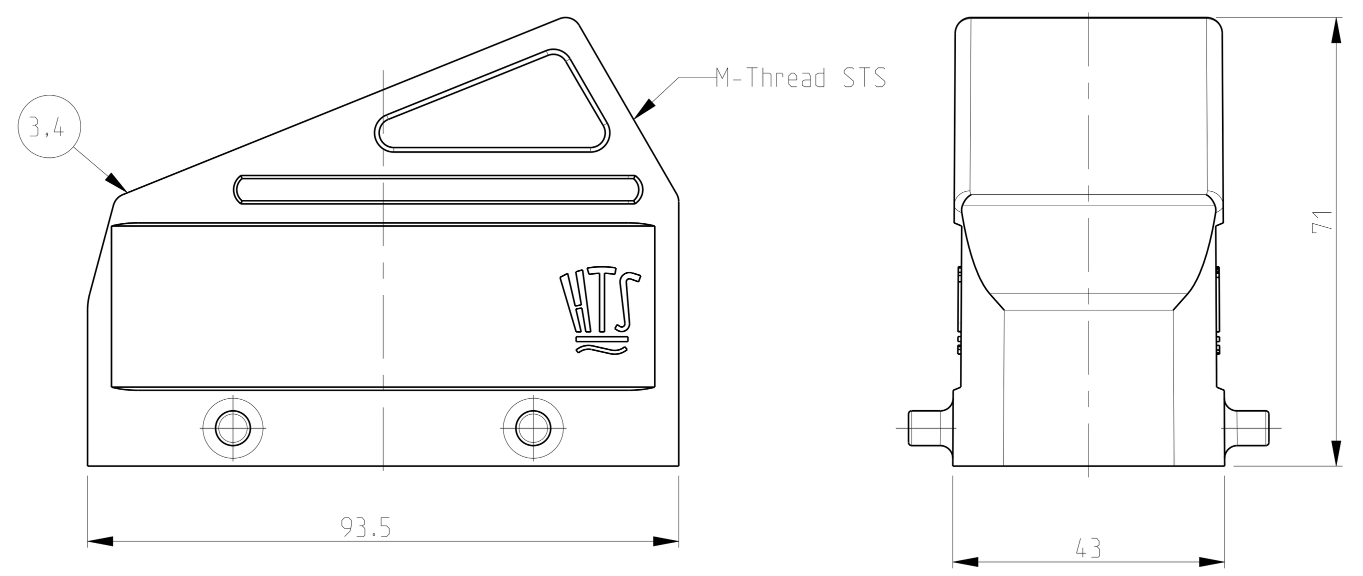

PN 3-2.1-1 & 0-8

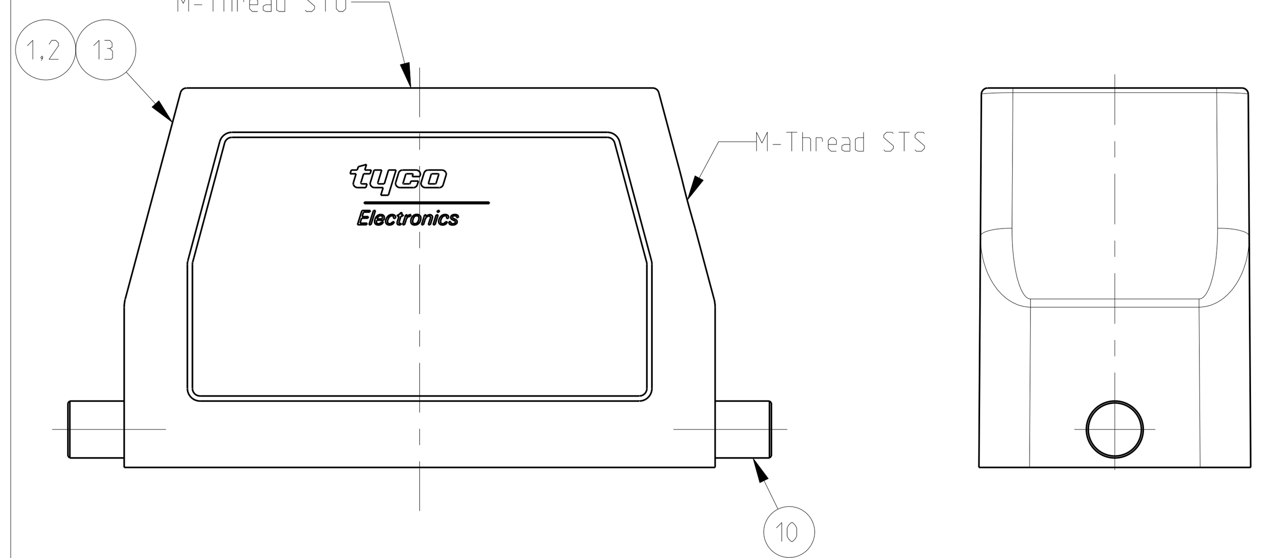

PN ~~2-1~~ & 2-2

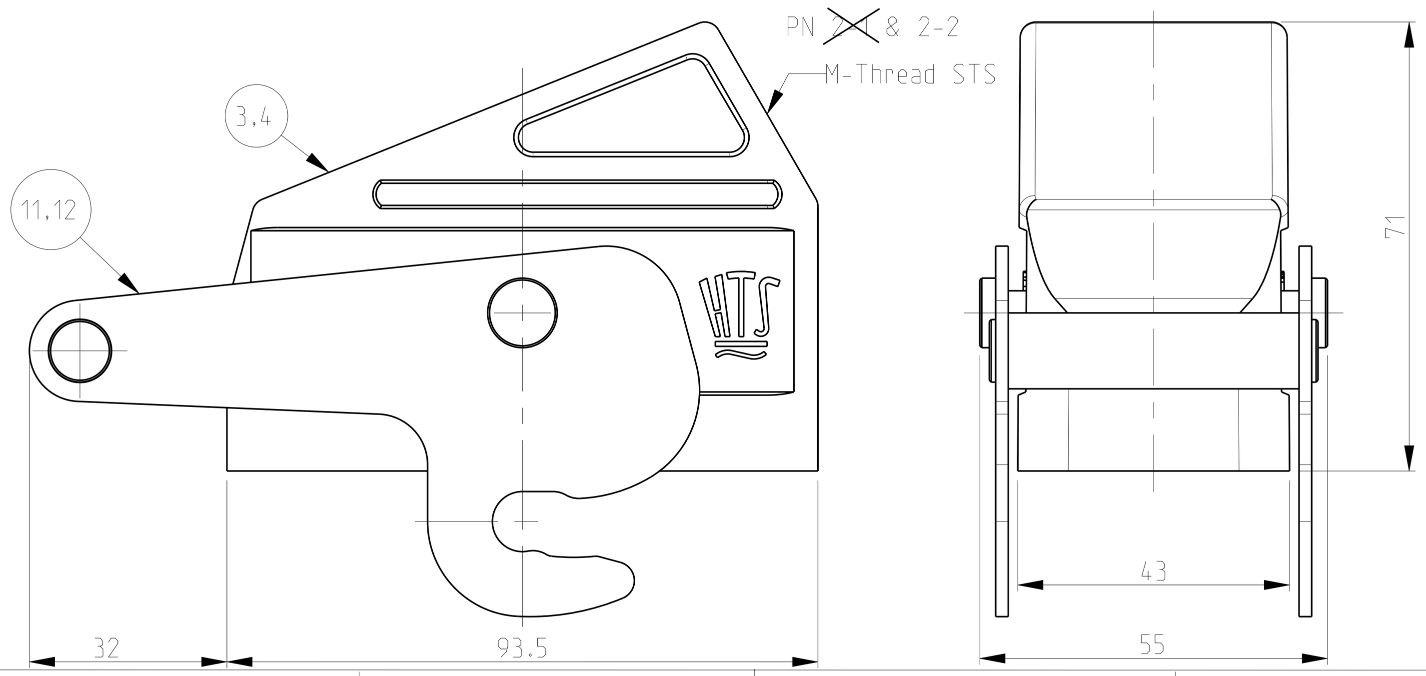

PN 3-6

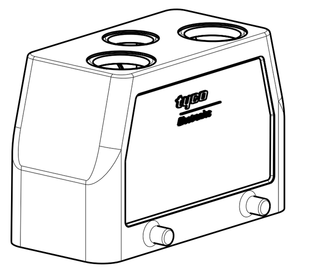

SCALE 1:2

PN 0-2.0-5.3-3.3-4.3-5.3-1

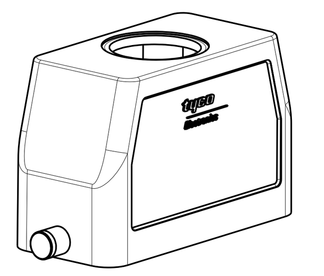

SCALE 1:2

PN 0-1.0-4.2-5.2-6 & 2-8

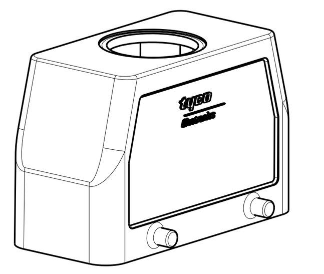

SCALE 1:2

PN 0-3.0-6.2-7 & 2-9

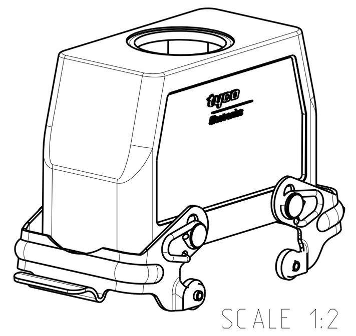

SCALE 1:2

PN 1-0.3-0.0-7.0-9 & 1-2

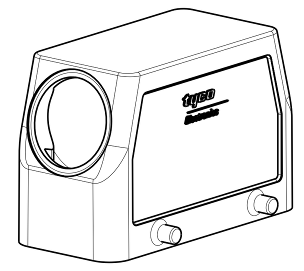

SCALE 1:2

PN 2-4 & 1-4

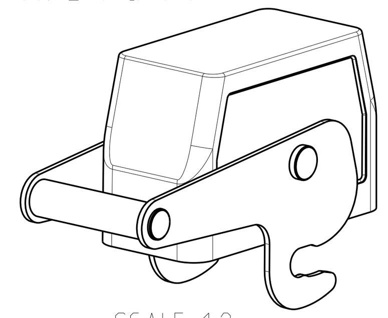

SCALE 1:2

PN 1-8 & 1-5

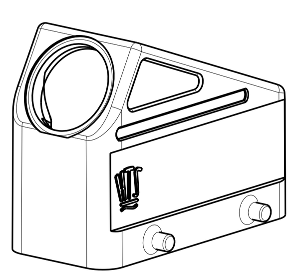

SCALE 1:2

PN ~~2-1~~ & 2-2

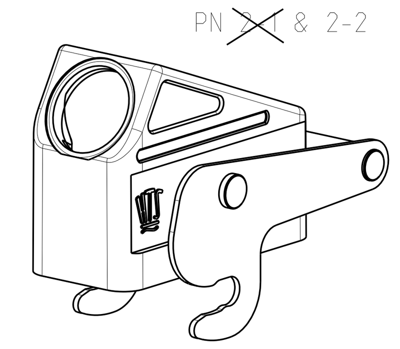

SCALE 1:2

PN 1-6

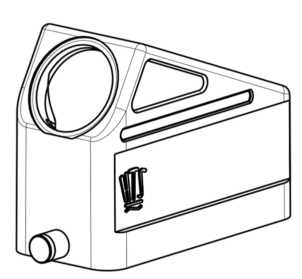

SCALE 1:2

PN 3-2.1-1 & 0-8

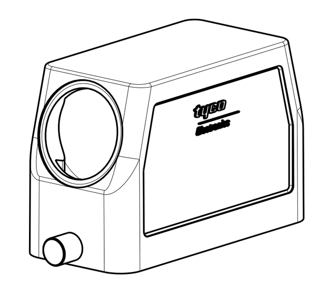

SCALE 1:2

ITEM NO	DESCRIPTION	MATERIAL	SURFACE	COLOR	NOTES
17	HB Hood	Aluminium		Grey	5
16	HB-EMV Hood	Aluminium	SEE NOTE 1	Black	
15	HB Hood	Aluminium		Grey	
14	HB Hood	Aluminium		Fire red, RAL 3000	
13	HB-EMV Hood	Aluminium	SEE NOTE 1	With out varnish	
12	ZB-Clip bolt	Stainless steel	Blank		
11	ZB-Clip bolt	Steel	Zinc plated	Blue	
10	LB-Clip bolt	Stainless steel	Blank		
9	LB-Clip bolt	Steel	Zinc plated	Blue	
8	LB-Side clip	Steel	Zinc plated	Blue	
7	VS-Locking Clip	Stainless steel	Blank		
6	VS-Locking Clip	Steel	Zinc plated	Blue	
5	VS-Clip bolt	Stainless steel	Blank		
4	HB-K Hood	Aluminium	Aluminium oxide	Black	
3	HB Hood	Aluminium		Grey	
2	HB-K Hood	Aluminium	Aluminium oxide	Black	
1	HB Hood	Aluminium		Grey	

ITEM NO	3-6	3-5	3-4	3-3	3-2	0-9	2-9	3-1	2-8	2-7	2-6	1-6	3-0	2-5	2-1
17	1														
16		1													
15			1												
14				1											
13					1										
12															1
11															
10					2										
9		2	2	2				2				2			
8		2	2	2				2				2			
7							2								
6										2					
5															
4															1
3												1			
2						1	1						1		
1								1	1	1	1			1	

ITEM NO	2-2	1-8	1-5	1-4	2-4	1-1	0-5	0-8	0-2	0-6	1-2	0-3	1-0	0-4	0-7	0-1
17																
16																
15																
14																
13																
12				1												
11	1				1											
10						2		2								
9							2		2							
8							2		2							
7																
6										2		2				
5																
4		1														
3	1		1													
2				1		1		1			1		1		1	
1					1		1		1	1		1		1		1

ORDERING TEXT

PN	ORDERING TEXT
3-6	HB.16.STO.1.M16+2.M20.G
3-5	HB-EMV.16.STS-GR.1.M32.G
3-4	HB.16.STS-GR.1.M25.G
3-3	HB.16.STS-GR.1.M32.G.rot
3-2	HB-EMV.16.STS-GR.1.M32.G
0-9	HB-K.16.STO-VS.1.M32.G
2-9	HB.16.STS-VS.1.M32.G.KM
3-1	HB.16.STS-GR.1.M32.G.KM
2-8	HB.16.STS.1.M32.G.KM
2-7	HB.16.STO-VS.1.M32.G.KM
2-6	HB.16.STO.1.M32.G.KM
1-6	HB-KF.16.STS-GR.1.M32.G
3-0	HB-K.16.STO.1.M25.G
2-5	HB.16.STS.1.M25.G
2-1	~~HB-K/KF-Z16.STS-ZB.1.M32.G~~ OBSOLETE
2-2	HB-KF-Z16.STS-ZB.1.M32.G
1-8	HB-K/KF.16.STS.1.M32.G
1-5	HB-KF.16.STS.1.M32.G
1-4	HB-K/Z.16.STS-ZB.1.M32.G
2-4	HB-Z.16.STS-ZB.1.M32.G
1-1	HB-K.16.STS-GR.1.M32.G
0-5	HB.16.STS-GR.1.M32.G
0-8	HB-K.16.STO-GR.1.M32.G
0-2	HB.16.STO-GR.1.M32.G
0-6	HB.16.STS-VS.1.M32.G
1-2	HB-K.16.STS-VS.1.M32.G
0-3	HB-K.16.STS.1.M32.G
1-0	HB-K.16.STS.1.M32.G
0-4	HB.16.STS.1.M32.G
0-7	HB-K.16.STO.1.M32.G
0-1	HB.16.STO.1.M32.G

THIS DRAWING IS A CONTROLLED DOCUMENT FOR TYCO ELECTRONICS CORPORATION
IT IS SUBJECT TO CHANGE AND THE CONTROLLING ENGINEERING ORGANIZATION SHOULD BE CONTACTED FOR THE LATEST REVISION.

DIMENSIONS: mm

TOLERANCES UNLESS OTHERWISE SPECIFIED:
n.ISO 8015:
n.ISO 2768-mH-E:
n.DIN 16901-120
0 PLC ±
1 PLC ±
2 PLC ±
3 PLC ±
4 PLC ±
ANGLES ±

MATERIAL

FINISH

DWN Schneider 16.01.2002
CHK Schweiger 16.01.2002
APVD –

PRODUCT SPEC 108-74001, 108-74003
APPLICATION SPEC 114-74001, 114-74004
WEIGHT

Tyco Electronics

Tyco Electronics, AMP, GmbH
D-53819, Neunkirchen, Germany

NAME
Hood
HB.16.M32.G
–

SIZE A1 | CAGE CODE 00779 | DRAWING NO C-1106449 | RESTRICTED TO –

CUSTOMER DRAWING | SCALE 1:1 | SHEET 1 OF 1 | REV B3

AMP 4805 REV 31MAR2000

Pro/ENGINEER DRAWING